Pickup Recycled Body Cut Form

To: _____ From: _____

Contact person: _____ Contact person: _____

Phone #: _____ Fax #: _____ Date: _____

Year: _____ Make: _____ Model: _____

VIN #: _____ Build Date: _____

Please sign: _____

Disclaimer: No Returns on Body Cuts

Important: these marks are our standard cuts – larger cuts may incur a surcharge

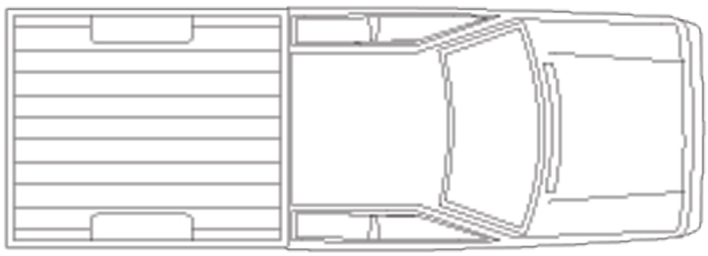

TOP VIEW

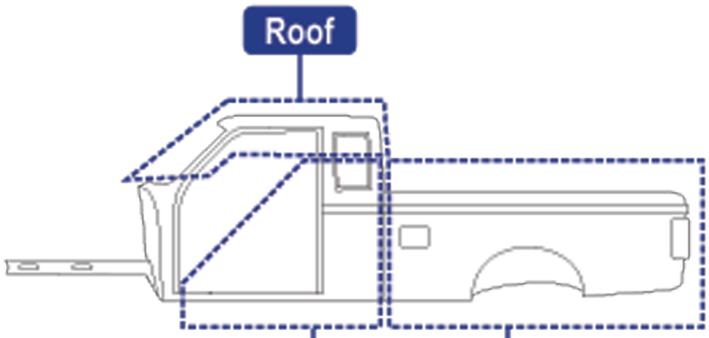

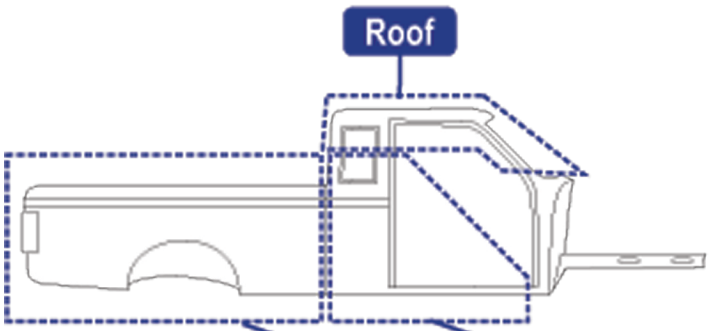

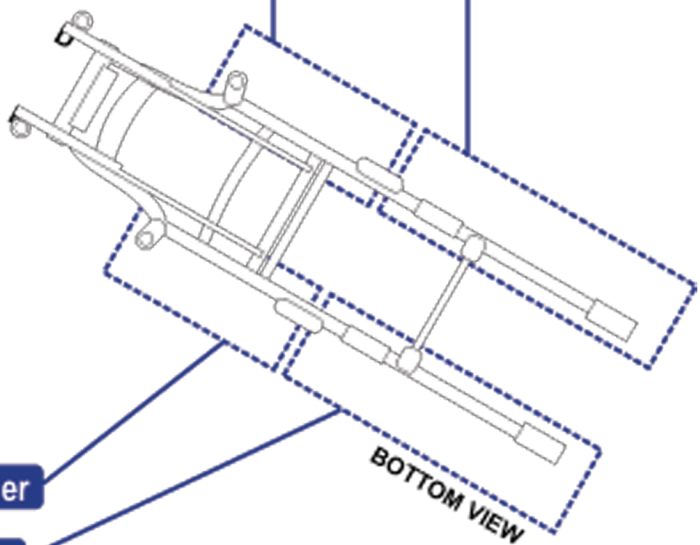

Cab Corner

Box Side

General Auto Parts

Indoor Auto Recycler

Toll free: 800-427-8997

Fax: 815 986-0772